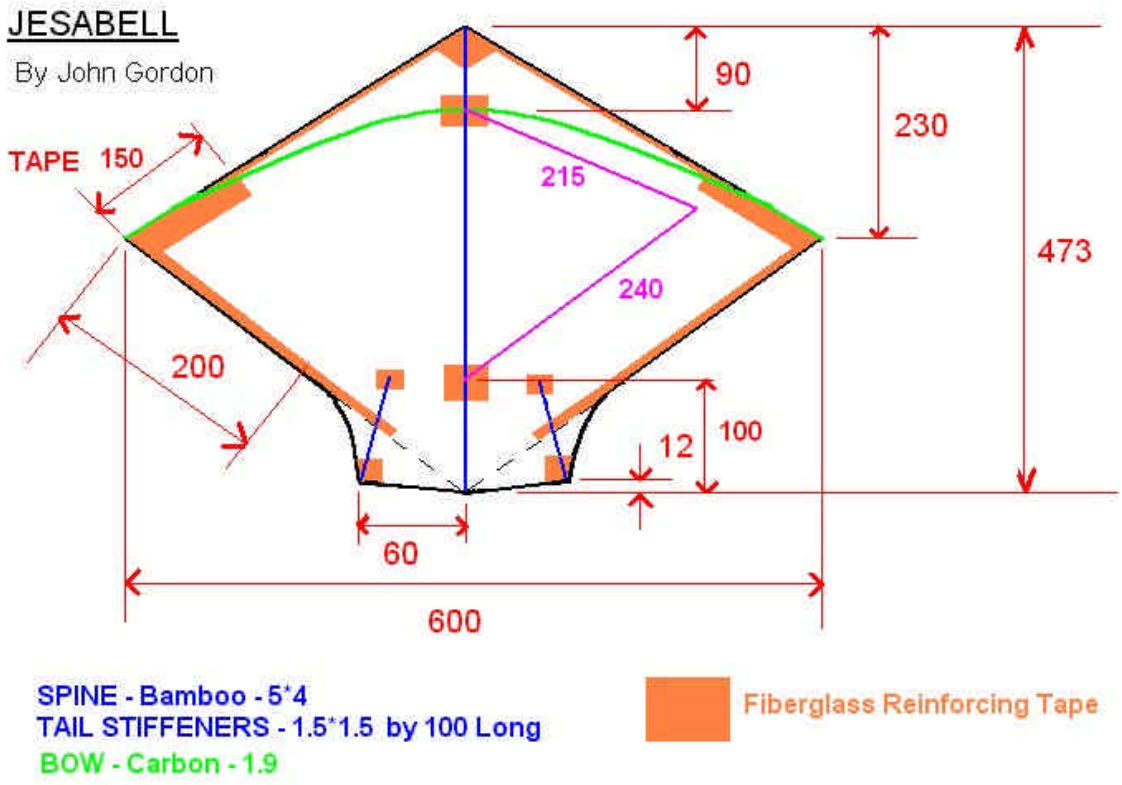

I think the bow diameter and the spine dimensions are in millimeters as are the dimensions of the kite.
Bruce